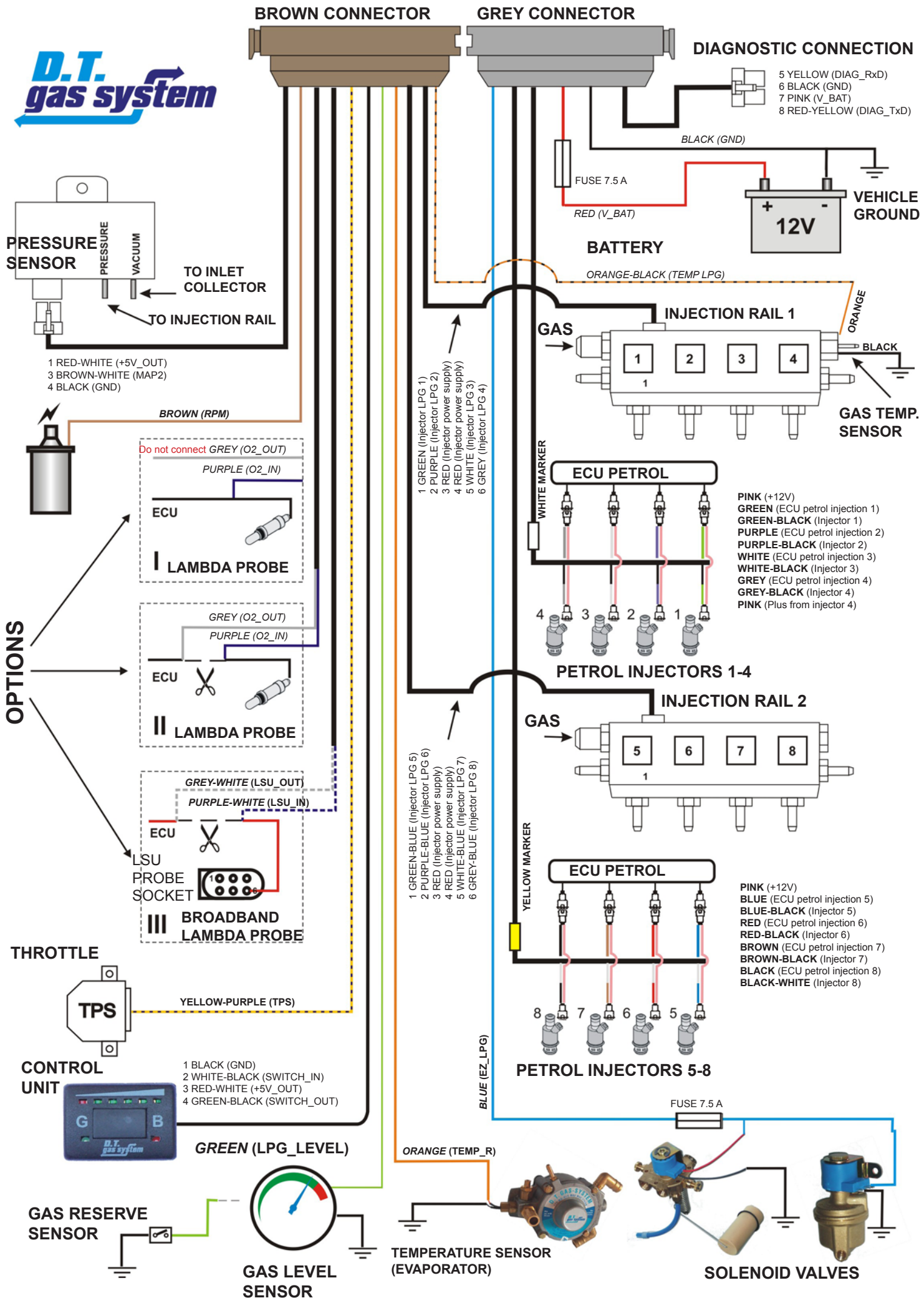CONNECTION DIAGRAM FOR GAS TECH 508S SEQUENTIAL GAS INJECTION SYSTEM